FD516DS

Professional undercounter dishwasher, double-skinned, with HTR rinse system, **integrated water softener** , 500 mm basket, **suitable for 600x400 mm euronorm trays&baskets**

Product Family	Dishwashers
Type	Front-loading dishwashers
Line	EASYLINE
Outside dimensions (WxDxH)	600x675x1290mm
Basket dimensions	500x500 mm
Rinse system	Atmospheric boiler and rinse pump (HTR system)

TECHNICAL SHEET

TECHNICAL DATA

Structure: AISI 304 stainless steel with double-skinned
Control type: electronic
Outside dimensions (WxDxH): 600x675x1290mm
Power supply / Total power installed: 400V 3N 50Hz / 5,2 kW; 230V 3N 50Hz / 5,2 kW; 230V 1N 50Hz / 3,7 kW
Basket dimensions: 500x500 mm
Baskets hour: 40 max
No. of programs: 8
Thermo-acoustic insulation: Door
Rinse aid dispenser: Peristaltic pump with electronic adjustment
Detergent dispenser: Peristaltic pump with electronic adjustment

Useable load height: 415 mm

Washing tank capacity: 11 lt.

Boiler capacity: 6 lt.

Boiler heating element: 4,5 kW

Tank heating element: 2,0 kW

Wash pump power: 0,7 kW

Rinse system: Atmospheric boiler and rinse pump (HTR system)

Water softener: Integrated

Wash system: Wash pump with 'Soft Start' system

Water consuption per cycle: 3,2 lt.

Drain system: Automatic drain pump with partial water exchange in the wash tank

Filtering system: Integral plastic tank filter with double stage filtration in the sump and additional micro filter for pump protection

Washing and rinse arms: 2 Wash arms in AISI 304 S/S and 2 Rinse arms in AISI 304 S/S

ACCESSORIES

KITSONLIV - Detergent and rinse aid level probe kit for undercounter dishwashers basket 400 and 500 and hoodtype dishwashers Topline and Easyline

EQUIPMENT

1 PB50D01 - Basket for dishes, max 18 piecesØ 250 mm

1 PB50G01 - Universal basket with flat bottom

1 PHOOS02 - Cutlery basket with 6 compartments

Do you need more information about this product? Contact us and we will reply to you as soon as possible.

CONTACT US

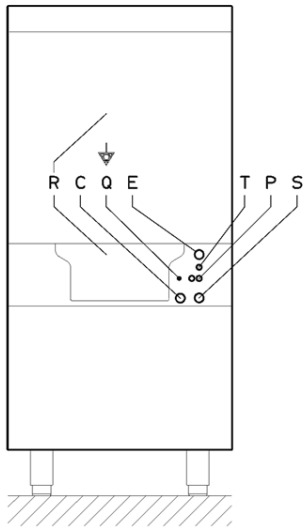

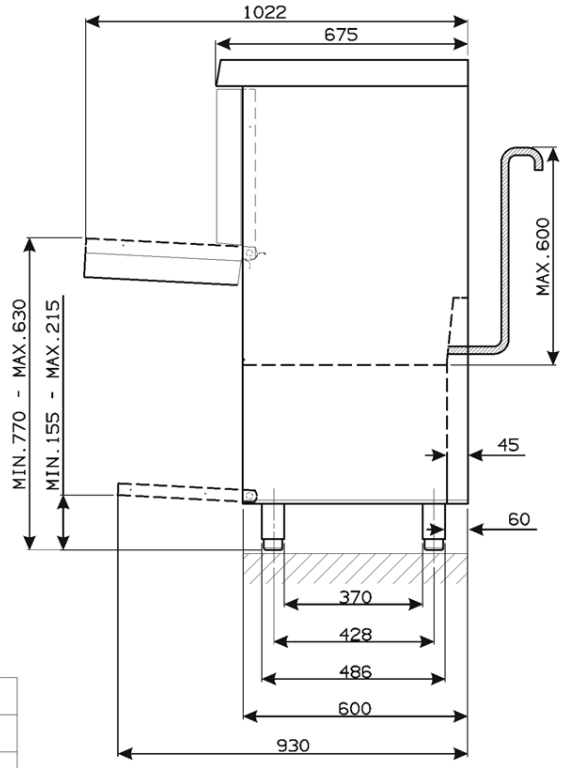

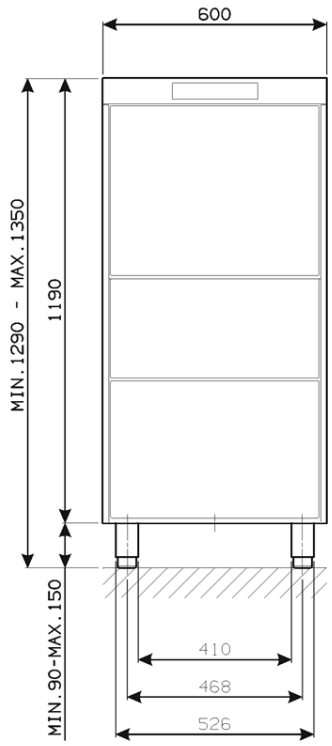

Q	MORSETTO EQUIPOTENZIALE EARTH TERMINAL
E	CAVO ALIMENTAZIONE ELETTRICA ELECTRICITY SUPPLY CABLE
C	TUBO DI CARICO FILLER HOSE
P	TUBI POMPE PERISTALTICHE PERISTALTIC HOSES
T	ENTRATA CAVO DI ALIMENTAZIONE DOSATORE ESTERNO EXTERNAL DISPENSER POWER CABLE ENTRY POINT
S	TUBO DI SCARICO DRAIN HOSE
R	PANNELLO RETRO LOWER BACK PANEL